| REVISION HISTORY | | | |
|---|---|---|---|
| DATE | REV | ECO# | COMMENT |
| | | | |

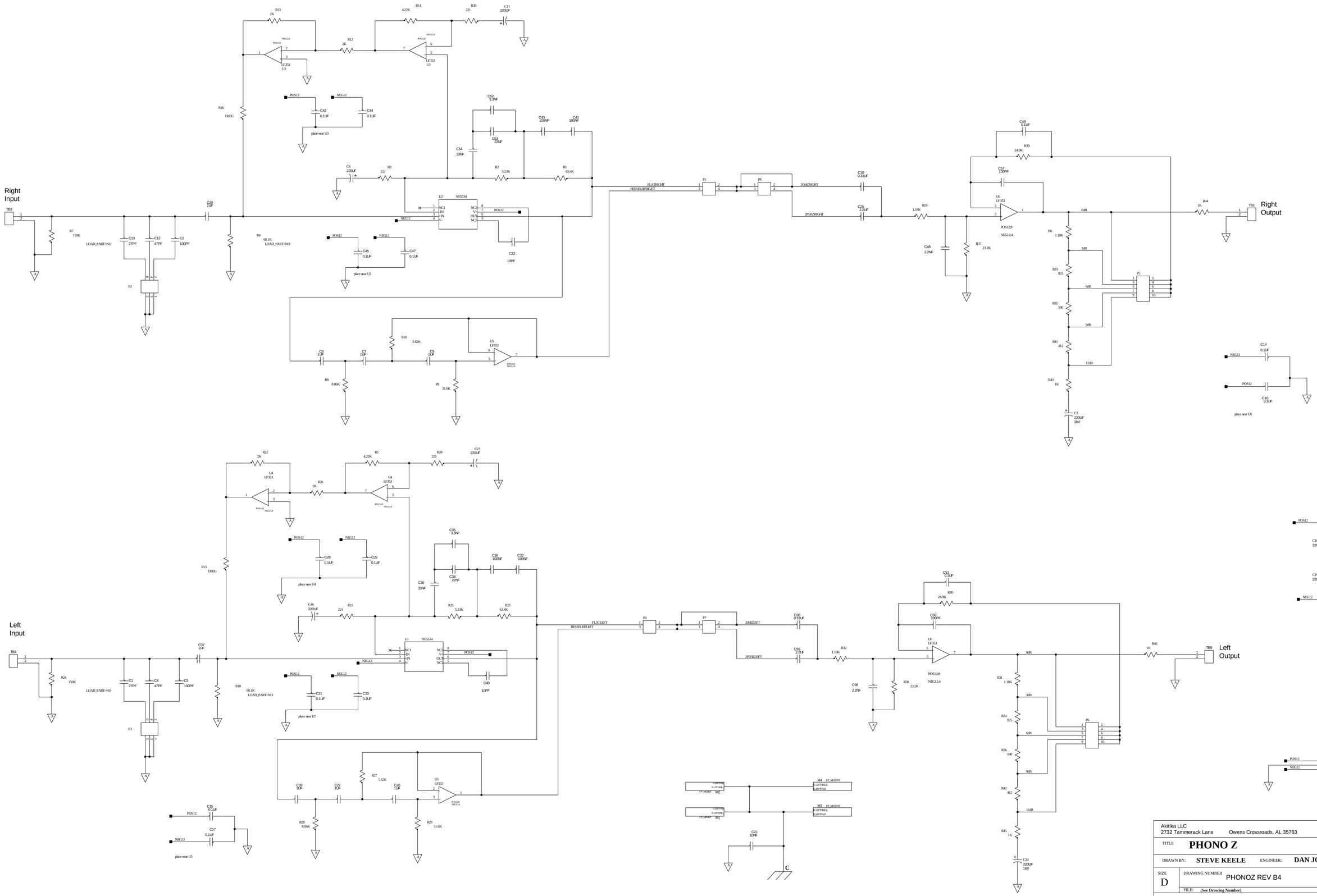


Akitika LLC
2732 Tammerack Lane Owens Crossroads, AL 35763

TITLE **PHONO Z**

DRAWN BY: **STEVE KEELE** ENGINEER: **DAN JOFFE**

SIZE D DRAWING NUMBER PHONOZ REV B4

FILE: **(See Drawing Number)**

DATE: July 19, 2015 SHEET 1 OF 1